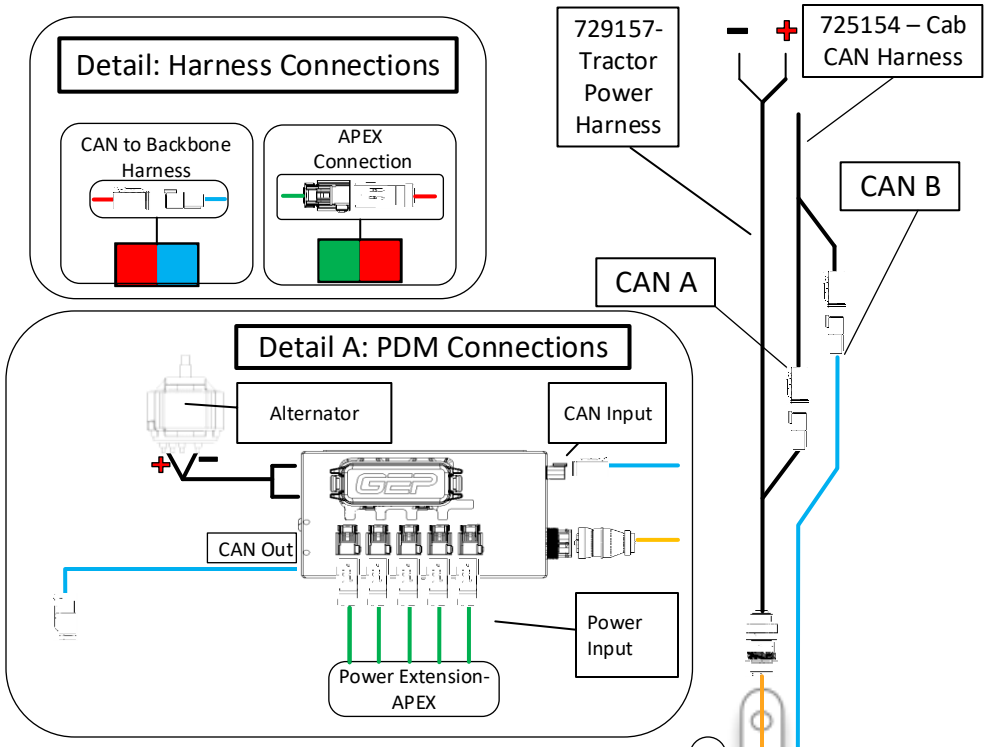

Electrical Systems Overview

John Deere 1770NT- 24R30

Item	Part NO	Description	QTY
1	729403	35'Tractor Power Ext	1
2	729144	30' CAN Ext	1
3	729180	Power Distribution Module (PDM)	1
4	729141	10' CAN Ext	1
5	729430	10 Row SRM Harness	2
6	729140	5' CAN Ext	1
7	729424	4 Row SRM Harness	1
8	729147	CAN Terminator	2
9	729150	5' Backbone Power Ext- APEX	1
10	729152	25' Backbone Power Ext- APEX	1
11	729153	35' Backbone Power Ext- APEX	1
12	729138	40' CAN Ext	1

Note: Item 1&2 are part of a kit when ordered

The PDM mounting location may vary slightly from planter to planter

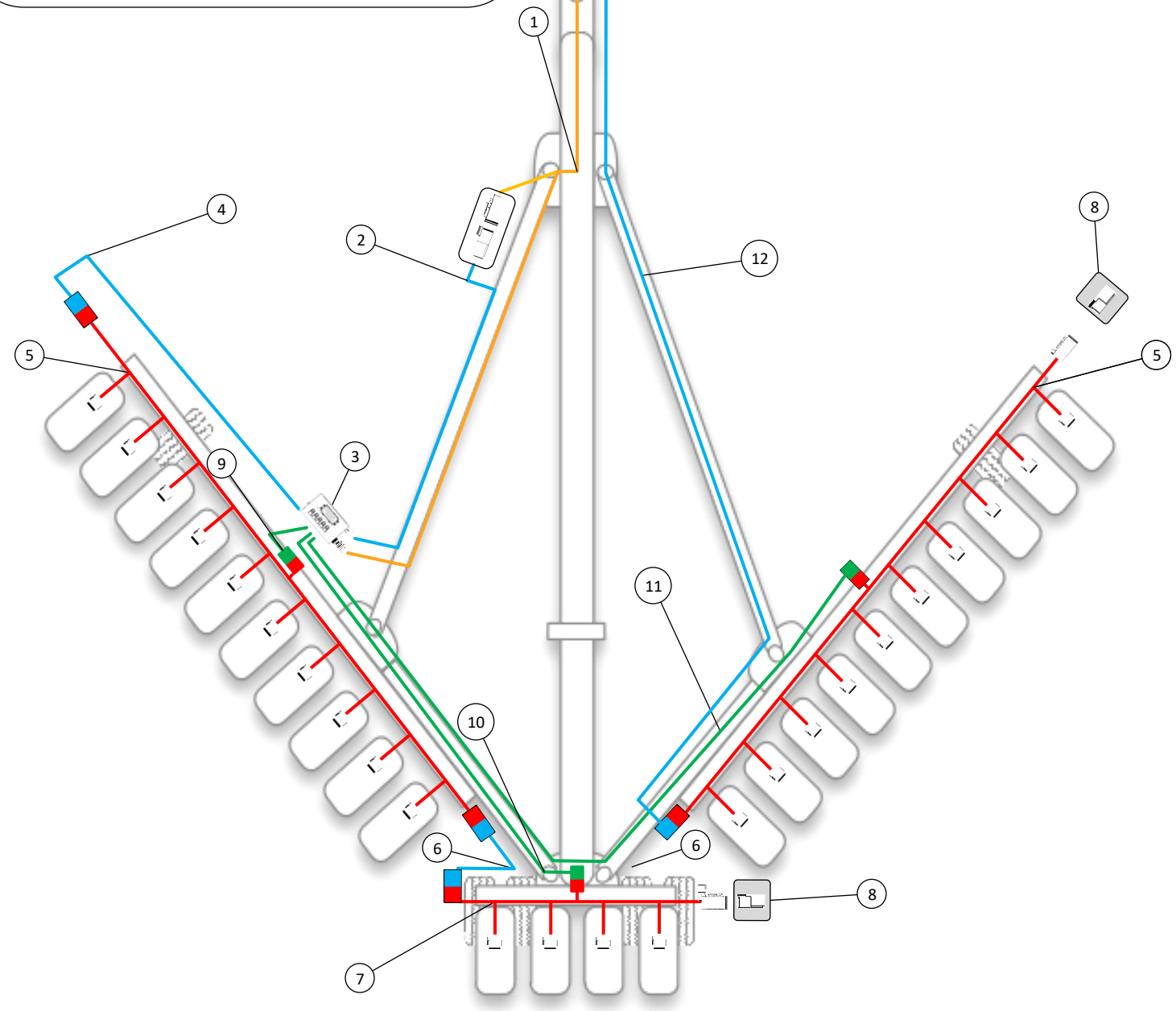
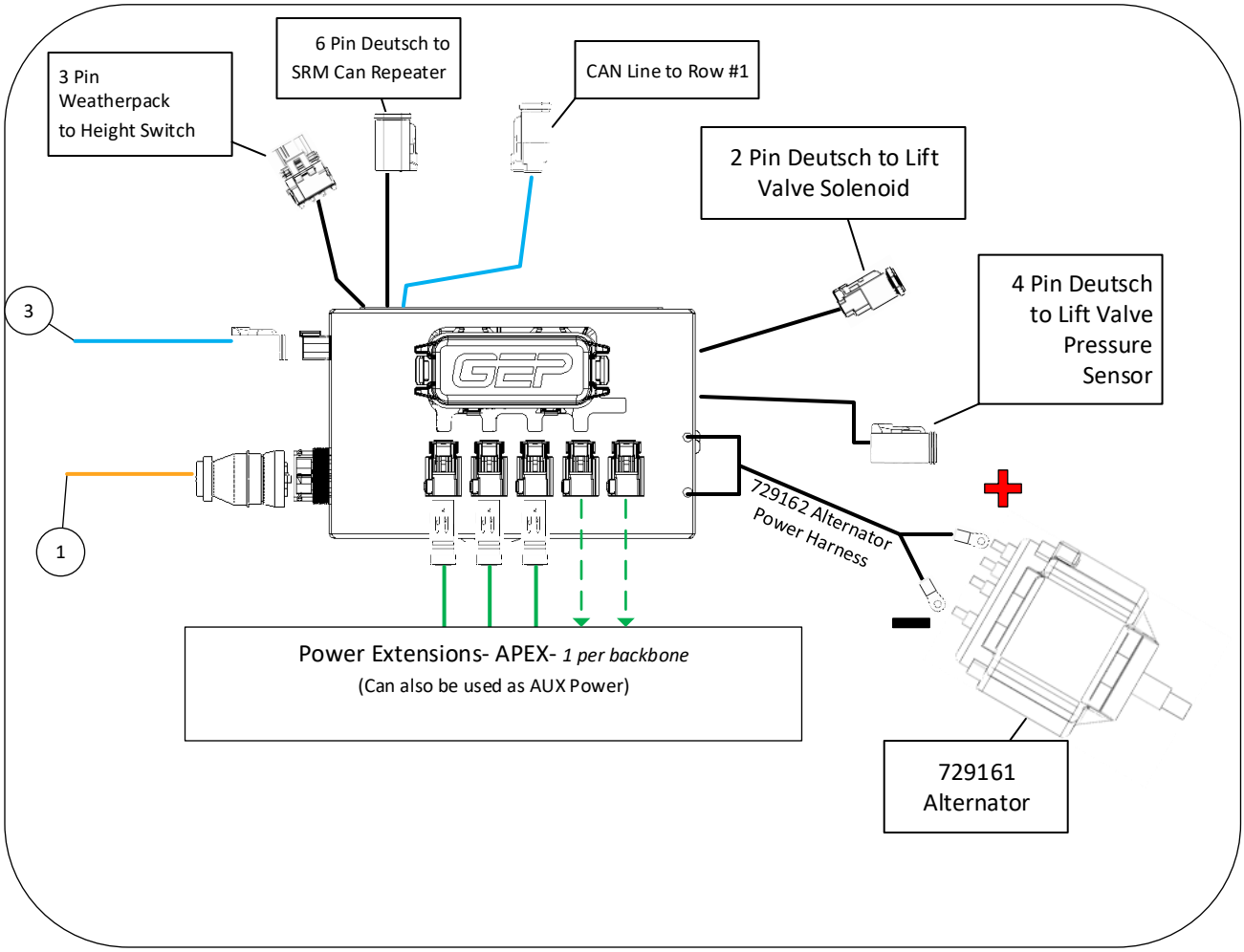
Callout A: Power Distribution Module (PDM)