Precision Row Unit
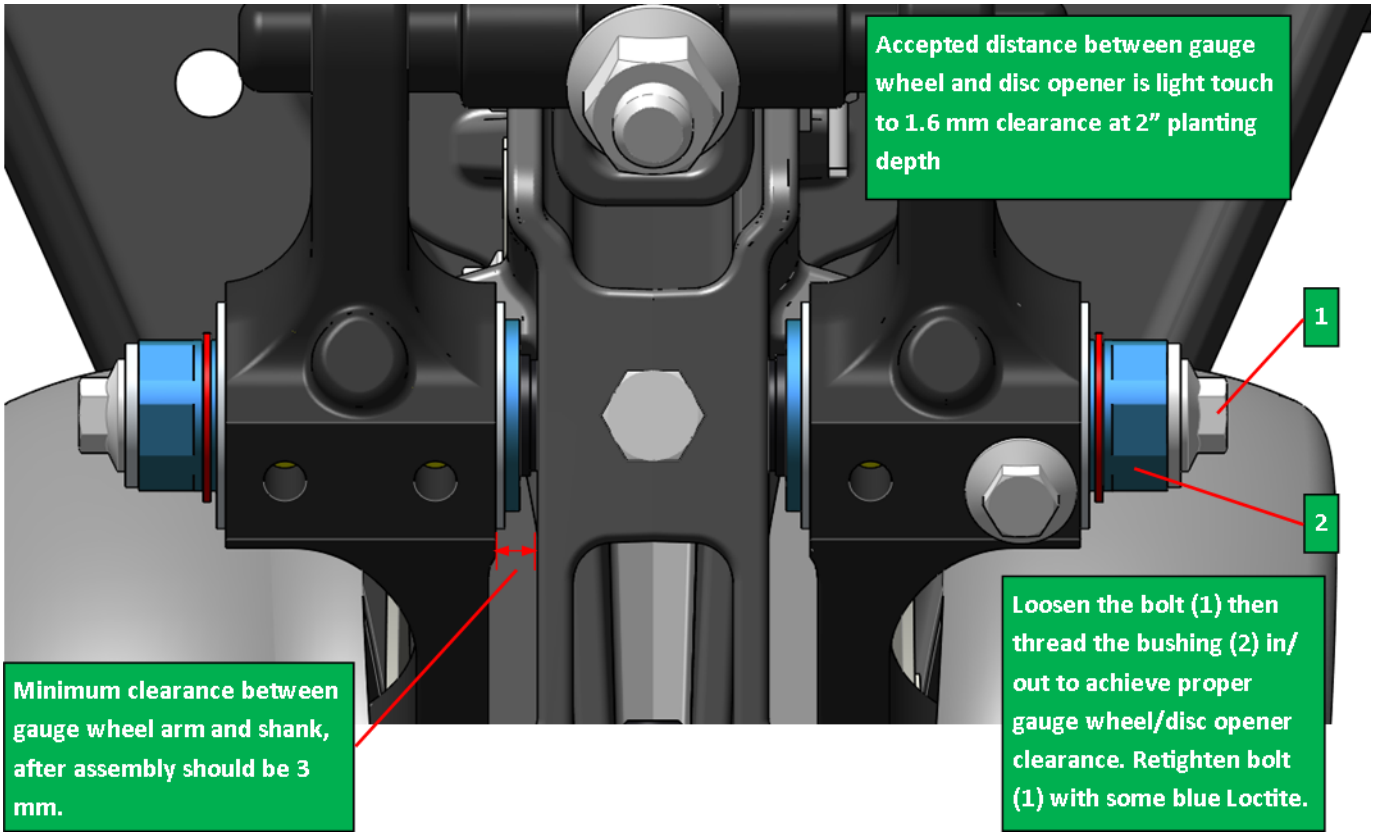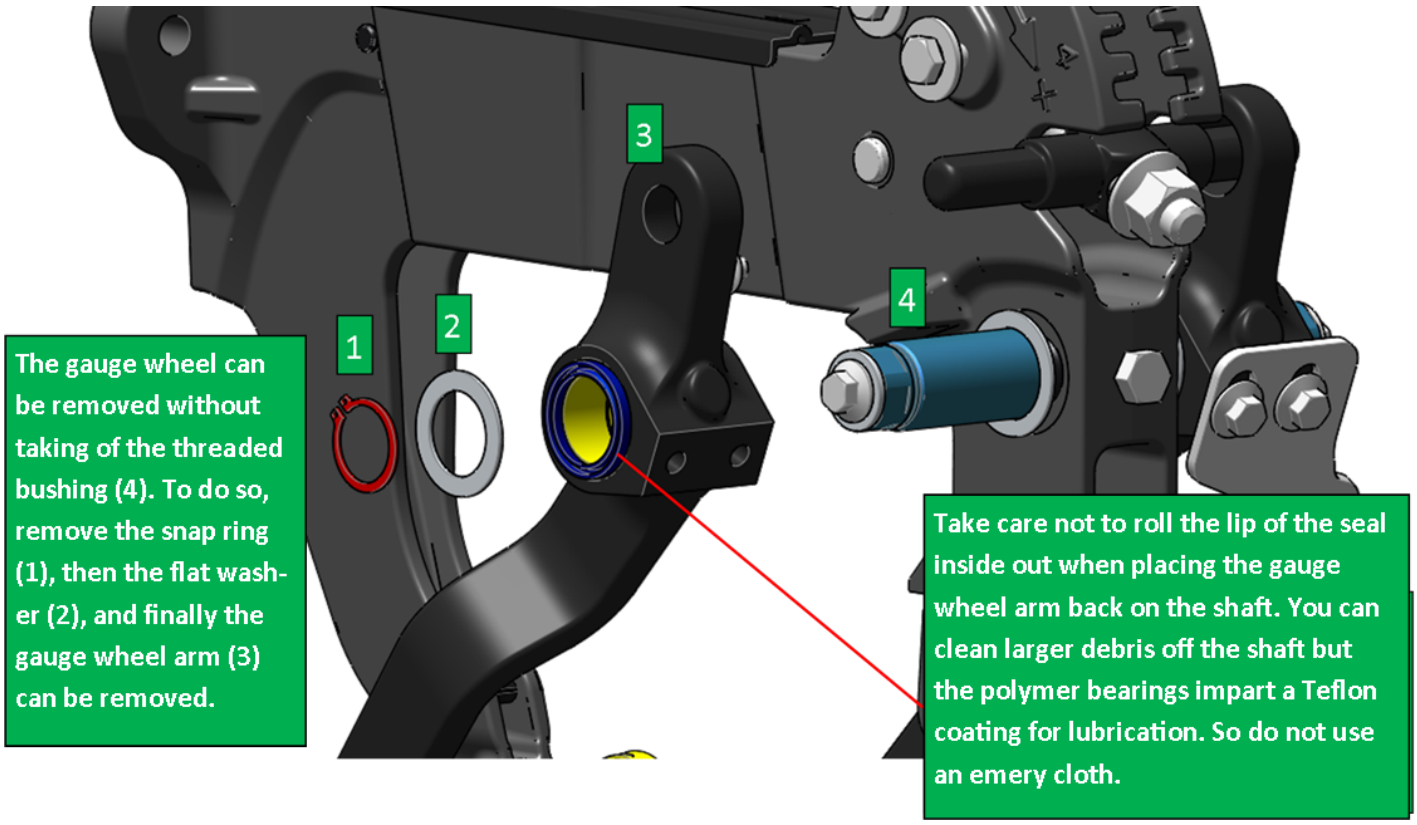
Gauge Wheel Arm Adjustment and Service